ISSN 2395-1621

Study on voice based and accident detection wheelchair system

#1Abhijit Chakrupe, #2Shivali Kankekar, #3Shubham Maurya, #4Ajit Shinde
#5Sayali Shinde

5shindesayali626@gmail.com

#12345Electronics and Telecommunication Engineering

Flora Institute of Technology Pune.

ABSTRACT

Due to some risky accidents and illness peoples are going through temporary or permanent disabilities. In case, if a person is unable to walk then it is crucial to use wheelchair. But, in serious cases, it is impossible to use wheelchairs independently or manually. In such cases patient or user becomes dependent on somebody else who handles the wheelchair. Researchers involved in smart wheelchair projects are aiming at designing smart wheelchairs to solve the crucial problems. This paper is broadly looked over the recent studies on voice based and accident detection wheelchair systems. It aims to evaluate the new technologies and to discuss new directions for our ongoing research project.

Keywords: Wheelchair systems, accident detection, voice generation.

ARTICLE INFO

Article History

Received: 9th April 2018

Received in revised form :

9th April 2018

Accepted: 13th April 2018

Published online :

13th April 2018

I. INTRODUCTION

Wheelchairs are used by the people who are unable to walk due to physical illness, injuries or other disabilities. During the last decades, the total numbers of vehicles on our roads have experienced a remarkable growth, making traffic density higher and increasing the driver's attention. The immediate effect of this condition is the impressive increase of traffic accidents on the road. It represents serious problem in most countries. So according to the rate of increasing accidents the people being disabled is more. In order to make the life's easier and independent for the disabled the researchers are working on automated wheelchairs.

These automated wheelchairs are controlled through different human features like iris movements, head movements, EMG based, Voice controlled, etc. In this paper, we would like to survey three different techniques of automated wheelchair which are designed for the easy movements from one location to other location independently.

1. Eye Tracking Powered Wheelchair

Here to control the wheelchair optical eye tracking system is utilized. The client's eye movements are converted to screen position utilizing the optical-type eye tracking system. The pupil-tracking goggles with video CCD camera and a frame grabber examined the series of human pupil pictures when

the user is looking at the screen. Another calibration algorithm is utilized to decide the manner of the eye stare in genuine time. Then design an interface with nine command zones to control powered wheelchair. The command at the calculated position of the looked screen is then sent to move the powered wheelchair.

This eye-ball system or eye-mouse combines the systems of eyeball following with equipment hardware and programming. The development of eyeball is utilized to control the mouse organizes rather than hands.

This new sort of interface between the human and the machine can help the weaken patients who can't utilize keyboard and mouse to play out the vision control. There are past frameworks which have utilized eye stare or course in which the face is indicated control dedicated wheelchair.

In this investigation, two diverse research spaces, to be specific, the optical pupil control and the powered wheelchair control, are joined to secure control gadget challenger persons with physical incapacities.

II. SYSTEM FRAMEWORK

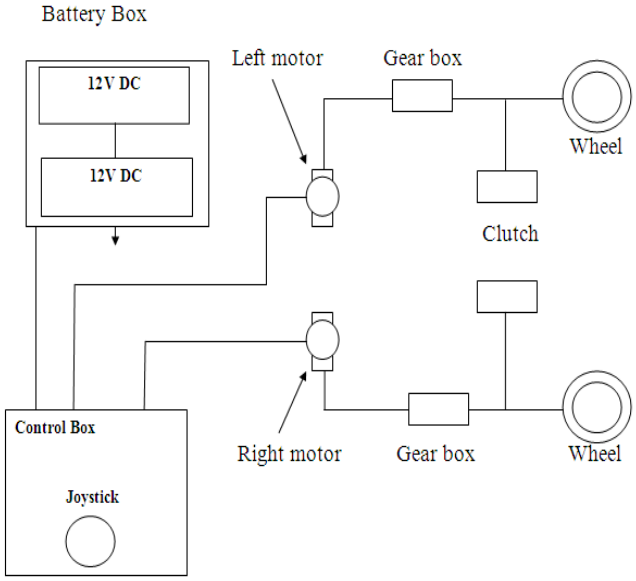

Fig.1. System Framework of Powered wheelchair [1]

A powered wheelchair consist of following parts: The charger plug, control box, controller, left motor, right motor, batteries, clutch, wheels, joystick and an operation interface as appeared in Fig.1. It utilizes a joystick as the information gadget to control the task of motor.

The pupil tracking system utilizes a camera to catch eye pictures, and tracks pupil movement by methods of an image processing system. To guarantee precise eye pictures to be captured without influencing the user's field of view, at that point mount the pinhole CCD camera under the edge of goggles. Also introduce a small bulb in order to upgrade the picture brightness. The moving position of the moving pupil is computed. The computed result is then transmitted to the powered wheelchair controller by method for USB to RS232 converter for the controlling the movement of the wheelchair. In this Eye tracking system, the eye movements are divided into nine commands such as upper zone represents forward movement, lower zone represents backward movements, the right zone represents right movements, and the left zone represents left movements. When the pupil follows other than these zones, it indicates a stop command. Based on these commands chair will rotate as per direction.

The eye tracking powered wheelchair is not easy to control. Both the ability to control eye position movements as per command and suitability of position correction will affect the system control.

2. Head movements based electric powered wheelchair

This paper introduces an easy to understand human machine interface (HMI) for hands free control of an electric powered wheelchair (EPW). The proposed HMI is contrasted and the joystick control of an EPW in an indoor situation. It has two modes: one uses just a single head movements for control the wheelchair and the other one uses four head movements. Both control modes acquire the movement information from the gyro- scope of the Emotiv EPOC headset. The trial comes about demonstrate that Control Mode 2 can be implemented at a quick speed reliably, achieving a mean time of 67.90 seconds for the two subjects. However, Control Mode 1 has lower performance, achieving a mean time of 153.20 seconds for the two subjects although it needs only one head movement. It is clear that the proposed HMI can be adequately used to replace the conventional joystick control for impaired and elderly people.

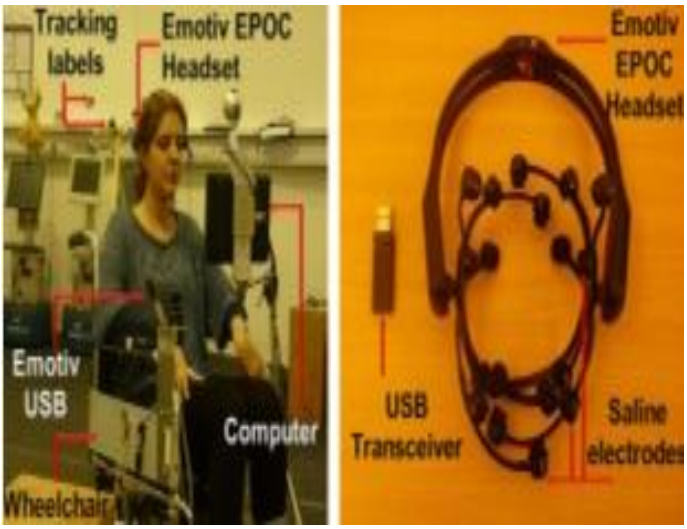

Fig.2. Head movements based electric powered wheelchair [2]

A HMI for hands free control of an electric controlled wheelchair in light of an EEG sensor called Emotiv EPOC, which can recognize head movements. Two strong subjects have worked a wheelchair utilizing the two modes in an indoor domain. It is critical to state that once the proposed HMI is running, the client does not have to keep the place at specific position. Hence, the tiredness of the client can be reduced. The two modes give four control summons: 'going forward', 'turning right', 'turning left' and 'stopping'. After giving a control command, the user automatically performs the opposite movement of the head in order to return to the original position, which may perform inverse control command. Therefore, a one-second delay is implemented for the user to restore his/her head to the neutral position. In addition, the X axis of the gyroscope is changing continuously when the user is swinging because of the movement of the wheelchair, therefore the user cannot subject the 'turning right' command when 'turning left' has not finished and vice versa. The turning angles of the head are determined by constants. The graphical user interface of this control mode gives the service of changing the

thresholds for left, right, up and down head movements at execution time, as well as the wheelchair speed.

The head controlled powered wheelchair is not easy to control. Both the ability to control head position as per command and suitability of position correction will affect the system control even though we have introduce the delay in this system.

3. Voice recognition and Touch screen based controlled wheelchair

In this system, voice recognition and touch screen are the two input modes are used to control the wheelchair. The key components are PIC microcontroller, DC brushless motor and PWM technique. When one want to alter the direction, the touch screen sensor is performed by pressing finger against the different quadrants on the touch screen, which has various values programmed for specific direction. This can also be controlled through voice commands utilizing voice controller. By putting a single letter in voice recognition kit for every direction control, the recognition time is reduced significantly and in this manner speedy reach to destination is obtained. The wheelchair consists of DC brushless motors at the backside and it is controlled by using PWM technique. A brake control component is included to control the wheelchair.

III. BLOCK DIAGRAM

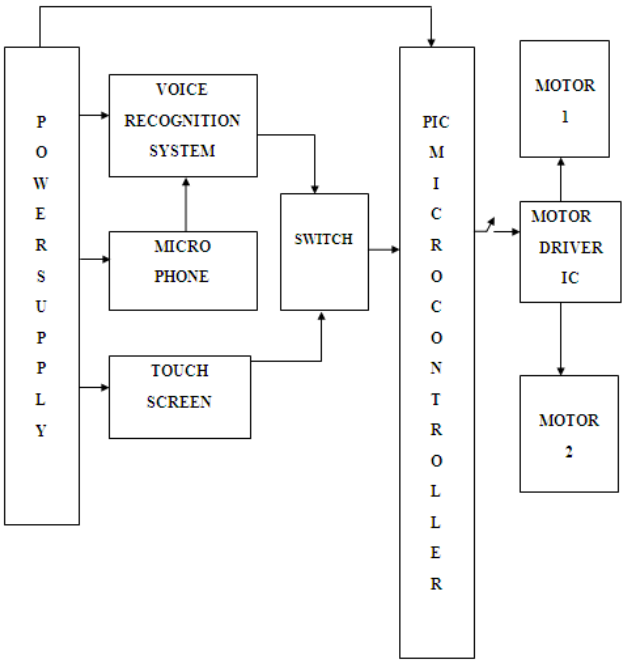

Fig.3. Block diagram of proposed system [3]

The above system consists of the 5- wire resistive touch screen and voice recognition system (HM2007). The voice control IC consists of 12 switches. In which 4 switches used for direction control and one switch to stop the wheelchair. The different are keys and their related letters stored in the support IC of the HM2007 kit to rotate the wheelchair as shown in Table.1.

Buttons	Letters	Direction
1	F	Front
2	L	Left
3	B	Back
4	R	Right
5	S	Stop

Table.1: Direction control keys and their associated letters in Voice Recognition System

The touch screen input consists of 6 quadrants. In addition a brake control switch is utilized to stop the wheelchair. The following are quadrants assigned to move the wheelchair by utilizing touch screen control.

Quadrant on Keyboard	Direction
1	Front
2	Left
3	Back
4	Right

Table.2: Direction and Speed control using Touch Screen

At the point when power supply is turned ON, the subject chooses the sort of input mode by utilizing the input selection switch. At the point when the voice mode is chosen, supply to the touch screen is turned OFF. The subject spells the prepared letter through the microphone associated with the kit. The comparing key value gets showed on the LED connected to the voice kit. This letters when perceived in the microcontroller, it triggers the backside motor of the wheelchair. Hence the wheelchair moves in the spelled direction. When one needs to stop the wheelchair, the letter S is explained.

IV. CONCLUSION

As per the three techniques discussed in this paper, we would like to conclude that the eye tracking wheelchair and head controlled wheelchair are difficult to design because of the sensitive parameters like the head movement and iris feature extraction. The third technique is comparatively reliable because of the voice commands given by the user to the wheelchair. We would like to conclude, among these three techniques voice controlled wheelchair is easier in designing and more reliable in terms of results.

REFERENCES

[1] Lin Chern-Sheng, Ho Chien-Wa, “Powered Wheelchair controlled through eye tracking system”, OpticaApplicata, 2(3), pp.401-412, 2006.

[2] Rechy-Ramirez Ericka Janet, Hu Huosheng and McDonald-Maier Klaus, “Head movements based control of an intelligent wheelchair in an indoor environment”, IEEE International Conference on Robotics and Biomimetics, 978-1-4673-2126-6, pp.1464-1469, 2012.

[3] C. Aruna, Parameswari. Dhivya A, Malini M., Gopu G., “Voice recognition and touchscreen control based wheel chair for paraplegic persons”.

